IS341/SIS334
BPM

Business Process Modeling Notation (BPMN)

Example 1:

- The computer repair process of an IT service provider can be described as follows.
- If a broken computer of a customer was received, it is first checked whether it can be repaired or not.
- If not, the customer is informed that their computer will be returned unrepaired.
- Repairing of the computer may require repairing its hardware components, configuration of software, or both, depending on the initial check. Upon completion of these steps, the computer is tested automatically for its correct functioning.
- If, during this test, an error or malfunction is detected, hardware repair and software configuration may need to be repeated.
- Finally, the computer, repaired or not, is returned to the customer by issuing a shipment with a logistics provider.
- Concurrently to this issuing, the invoice is sent to the customer – either for the repair or for the initial check, if the computer cannot be repaired – and then its payment shall be received, before the process ends.

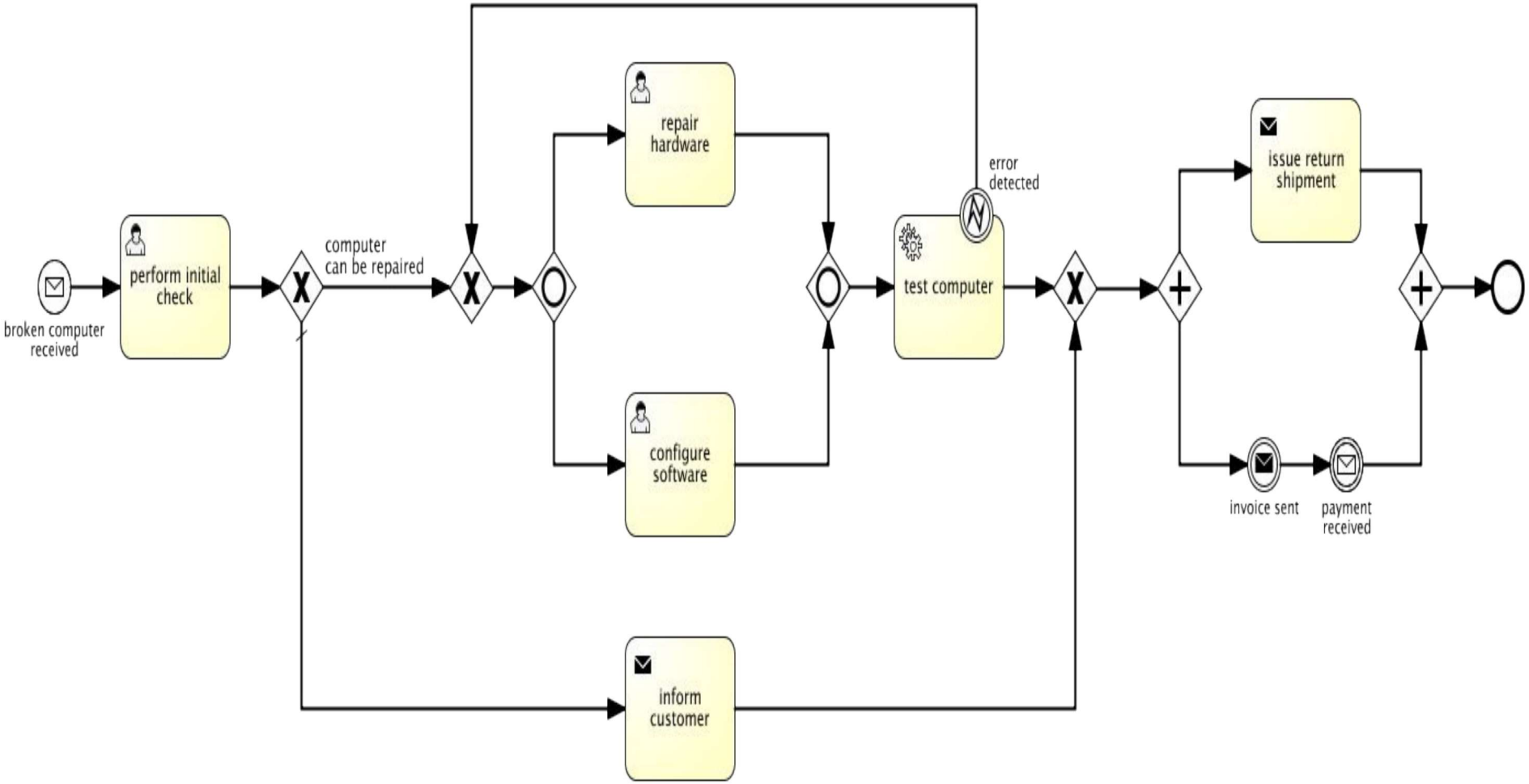
broken computer received
perform initial check
computer can be repaired
repair hardware
configure software
inform customer
error detected
test computer
issue return shipment
invoice sent
payment received

EXAMPLE 2

- Upon receiving a purchase order from a customer, the order fulfillment process starts by automatically checking the order first.
- If it cannot be fulfilled, e.g., if the customer ordered a belt drive in combination with derailleur gears (Which are not compatible), the order will be rejected, of which the customer will be notified.
- If the order is ok, the sales department sends the customer a request for an advance payment. If the customer does not respond within two weeks, the order will also be rejected (see above). If the customer sends a cancellation message within two weeks, the order will be canceled.
- Only if the customer submits the advance payment within due time, the process continues.
- That is, the manufacturing department's starts building the bicycle, while, at the same time, the sales department invoices the customer.

EXAMPLE 2 CONT'D

- The manufacturing consists of two steps, first all required parts are obtained from the warehouse. Several people of the manufacturing department may collaborate and everyone picks up some parts. Then, the bicycle is assembled by one person.
- If during either step an error occurs, the issue is fixed and manufacturing starts over.
- Once the invoice (see above) has been sent to the customer, the sales department waits for the final payment.
- If it is not received within two weeks, a reminder is sent to the customer. This may be repeated, if necessary.
- Once the final payment has been received and the bicycle has been manufactured, the bicycle is shipped to the customer. Subsequently, the process ends with a fulfilled order.
- Note: in this example pools & lanes are introduced

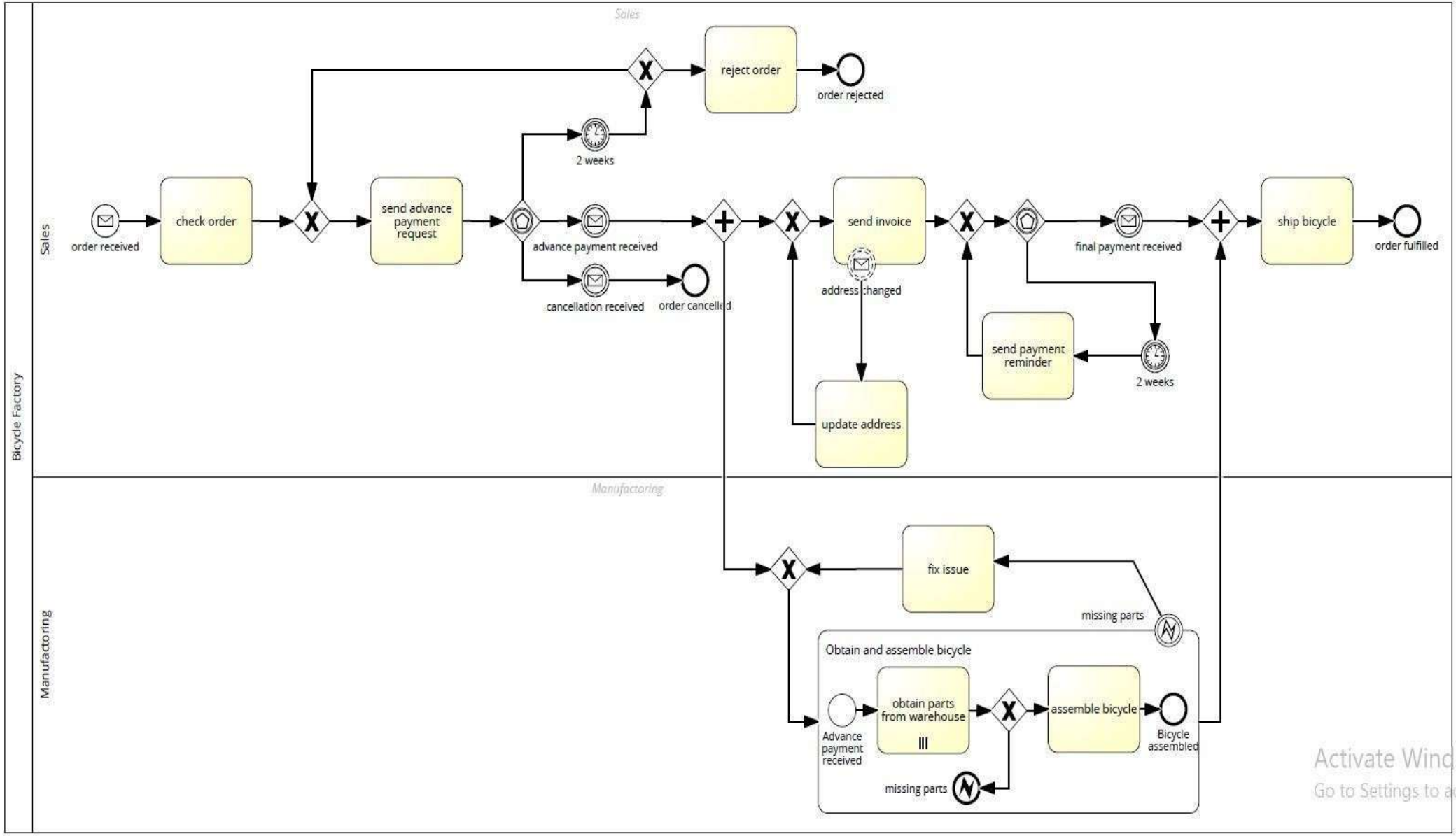

Activate Windo
Go to Settings to acti

EXAMPLE 3

- Process starts with the pizza customer, who has noticed her stomach growling. The customer therefore selects a pizza and orders it. After that, the customer waits for the pizza to be delivered.
- The customer waits for two different options that could happen next: either the pizza is delivered, or there is no delivery for 60 minutes, i.e., after one hour the customer skips waiting and calls the vendor, asking for the pizza.
- We now assume that the clerk promises the pizza to be delivered soon, and the customers waits for the pizza again, asking again after the next 60 minutes, and so on. Let's have a closer look at the vendor process now. It is triggered by the order of the customer.
- After baking the pizza, the delivery boy will deliver the pizza and receive the payment, which includes giving a receipt to the customer.

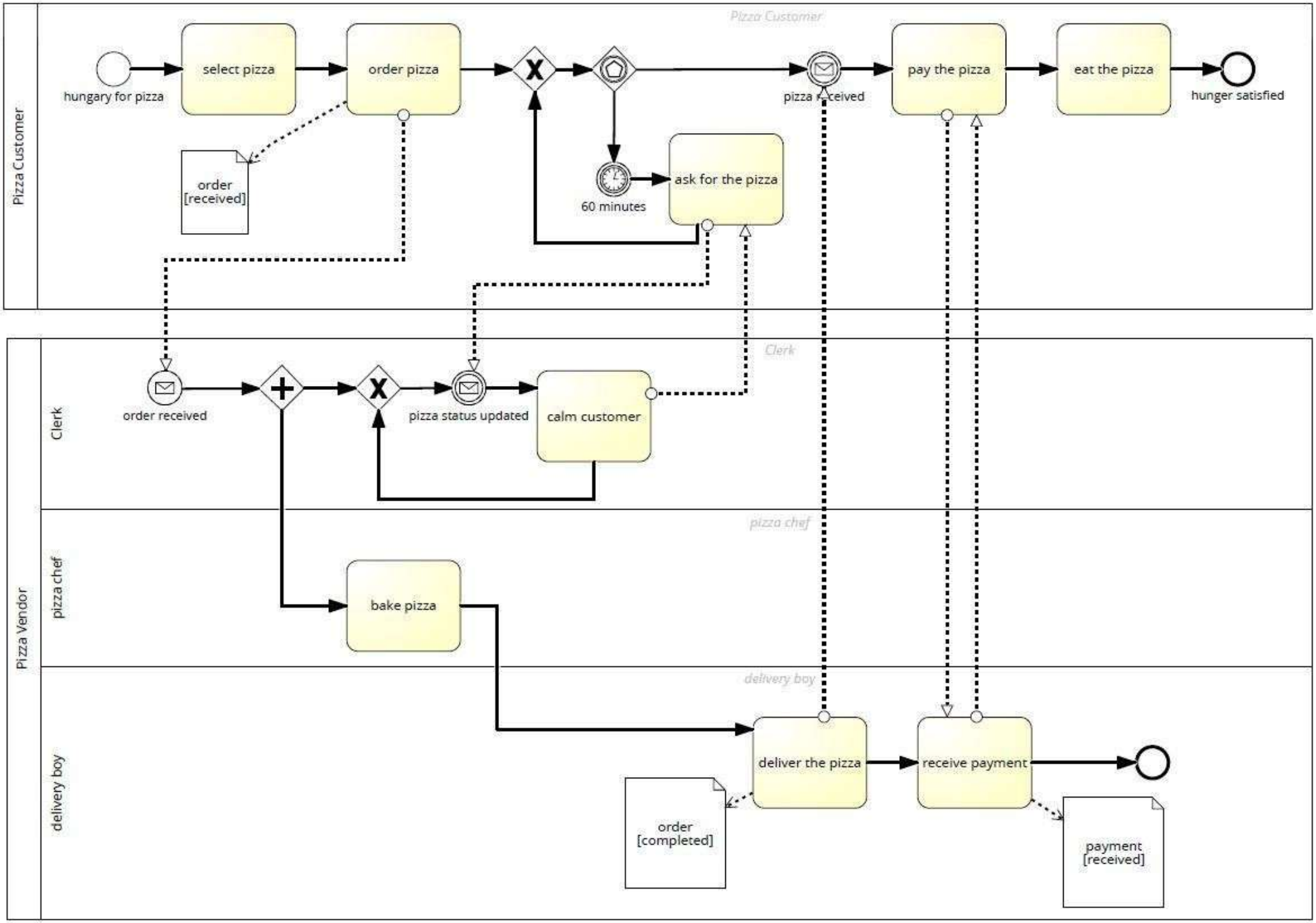
Pizza Customer
hungary for pizza
select pizza
order pizza
order [received]
60 minutes
ask for the pizza
pizza received
pay the pizza
eat the pizza
hunger satisfied
Pizza Vendor
Clerk
order received
pizza status updated
calm customer
pizza chef
bake pizza
delivery boy
deliver the pizza
receive payment
order [completed]
payment [received]